Current part is item (11) on diagram. Available at www.oshkoshequipment.com

SCTION II. REPAIR PARTS FOR ORGANIZATIONAL, INTERMEDIATE (FIELD), (DIRECT AND GENERAL SUPPORT) AND DEPOT MAINTENANCE

(1) ILLUSTRATION a FIG NO.	(1) b ITEM NO.	(2) SMR CODE a ARMY	b AIR FORCE	c NAVY	d USMC	(3) USMC a SSI	b REPL FACTOR	(4) NATIONAL STOCK NUMBER	(5) DESCRIPTION REF NUMBER & MFR CODE	USABLE ON CODE	(6) U/M	(7) QTY INC IN UNIT	(8) USMC QTY PER EQUIP
									GROUP 10 - ENGINE				
54		PAFHD	PAFDD	PAFHD	PAFHD			2815-01-040-3662	ENGINE 5R3635 11083 (SEE FIGURES 16, 33, 37, 38, 39, 43, 44, 45, AND 52 THROUGH 78 FOR BREAKDOWN)		EA	1	1
54									AIR LINES				
54	1	PAOZZ	PAFZZ	PAHZZ	PAHZZ	D	.008	5305-00-115-9526	BOLT MS18154-58	96906	EA	1	9
54	2	PAOZZ	PAFZZ	PAHZZ	PAHZZ	D	.010	5310-00-117-4788	WASHER 5M2894	11083	EA	5	71
54	3	PAOZZ	PAFZZ	PAHZZ	PAHZZ	D	.013	5340-00-118-3095	CLIP 7M8322	11083	EA	1	1
54	4	AOO	AOO	MHH	MHH				TUBE ASSY 6N1022	11083	EA	1	1
54	5	PAOZZ	PAFZZ	PAHZZ	PAHZZ	D	.008	4730-00-013-7397	NUT 4B8756	11083	EA	2	2
54	6	PAOZZ	PAFZZ	PAHZZ	PAHZZ	D	.004	4730-01-068-7274	TUBE 5P11948	11083	EA	1	1
54	7	PAOZZ	PAFZZ	PAHZZ	PAHZZ	D	.006	4730-00-496-7511	ELBOW 9S7720	11083	EA	1	1
54	8	PAOZZ	PAFZZ	PAHZZ	PAHZZ	D	.008	4730-01-125-9776	PLUG 9L8492	11083	EA	1	1
54	9	PAOZZ	PAFZZ	PAHZZ	PAHZZ	D	.006	4730-01-125-9752	TEE 9L9045	11083	EA	1	1
54	10	PAOZZ	PAFZZ	PAHZZ	PAHZZ	D	.006	4731-00-277-9386	BUSHING 895-8D	80049	EA	1	1
54	11	PAFZZ	PAFZZ	PAHZZ	PAHZZ	D	.006	2990-01-032-7257	PIPE 6L3052	EA 11083	1	1	
54	12	PAOZZ	PAFZZ	PAHZZ	PAHZZ		.030	5330-00-074-3773	PACKING, PREFORMED P/O KIT P/N 5P9117 4L8337	11083	EA	2	8
54	13	PAOZZ	PAFZZ	PAHZZ	PAHZZ	D	.008	5306-00-637-4956	BOLT S1588	11083	EA	4	21
54	14	PAOZZ	PAFZZ	PAHZZ	PAHZZ		.030	5330-00-760-7367	GASKET 5S6735	11083	EA	1	2
54	15	PAFZZ	PAFZZ	PAHZZ	PAHZZ			2815-01-032-2211	ELBOW 7L496	11083	EA	1	1

Current part is item (11) on diagram. Available at www.oshkoshequipment.com

Current part is item (11) on diagram. Available at www.oshkoshequipment.com

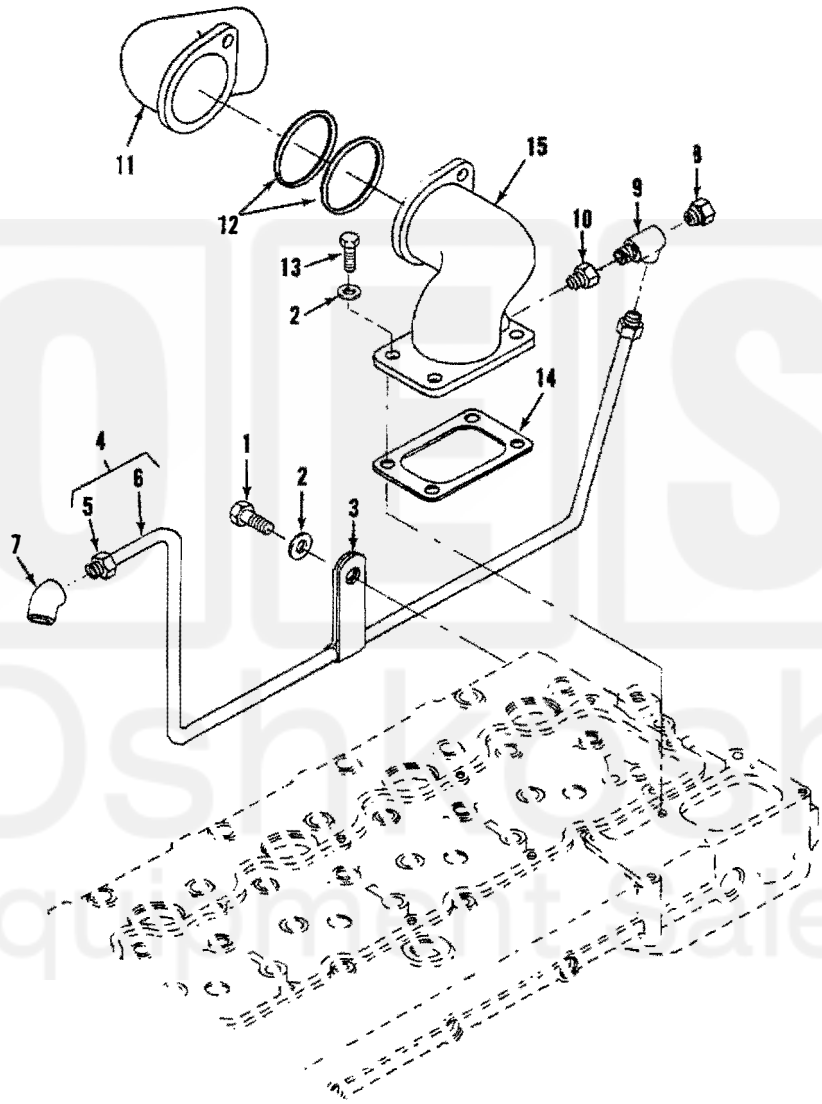

Figure 54. Air Lines

Current part is item (11) on diagram. Available at www.oshkoshequipment.com